PLAS-TIES

XL-2

No.	Part No.	Description	Qty.
5	56715	1/4-20 X 1/2 Screw Hex Button	4
10	505B180	Lower stop	
15	505R182	Hinged Cover	
20	117278	Insulator, Switch	
25	56501	4-40 Hex Nut	
	16607	4-40 Lock Washer	2
30	16103	1/4-20 Hex Nut Cad Plated Stud	
	16602	1/4 Lockwasher Internal Tooth	4
35	506341	Motor Run Capacitor 6X656 10MFD Rated	
40	16932	Metal Capacitor Clamp for XL 3X684	
45	56501	4-40 Hex Nut	
	16607	4-40 Lock Washer	2
50	56802	#10 Flatwasher	9
55	56710	10-24 X 5/8 Phillips Pan Head Screw	9
60	505R181	Fixed Cover	
65	16402	8-32 X 3/8 PHP Screw	
	16608	Lockwasher Internal Tooth 8-32	4
70	56823	Axial Fan	
	56824	Fan Guard FG-8	
75	506351	Strip Grommet	
80	56904	Lens Dialco 135-3271	
85	56903	Light Bulb 120-PSB	
90	56902	Lamp Holder & Hardware	
95	56500	10-32 Hex Kepnet	4
100	18030	4-40 X 1/2 PHP Screw	2
110	56801	#4 Flatwasher	2
115	16407	4-40 7/8 Screw PHP	2
120	56801	#4 Flatwasher	2
125	220847-2	Spacer	
130	16907	Micro Switch	
135	505B183	Hinge	
140	506336	10-32 X 3/8 Pan Head Slotted Screw	4
145	56500	10-32 Nut With Washer	
150	506336	10-32 X 3/8 Pan Head Slotted Screw	
155	56500	10-32 Hex Kepnet	
160	506336	10-32 X 3/8 Pan Head Slotted Screw	5
165	18030	4-40 X 1/2 PHP Screw	
170	56900	Metal Cable Clamp 1/4î	
175	56908	Fuseholder	
180	56908	Fuseholder	
185	16614	3/8 Lockwsher	
190	Part of 210		
195	14432	Thumbscrew Black Nylon	
	56728	1/4-20 X 1/2 Screw Socket Head	2
200	Part of 175		
205	56909	5 AMP Fuse	
210	56924	On/Off Switch	
215	Part of 275		
220	56905	Control Knob	
225	16908	Circuit Breaker	
230	16960	6-32 X 3/8 Flat Head Screw for Counter	2
235	16975-1	Production Counter	
	16618	Rubber Gasket for Counter Support	
240	505C206	Front Cover, Box	
245	16961	6-32 Hex Nut for Counter	
250	Part of 225		
255	Part of 275		
260	Part of 275		
265	56704	1/4-20 X 1/2 PHP Screw	
270	505D142	Chassis Electrical	
275	505B132	Time Delay Relay	
280	506340	Timer Socket	
285	506347	Aluminum Socket Holder	
290	56500	10-32 Hex Kepnet	
295	18031	4/40 X 3 1/2 MS	
300	56403	Connector Strain Relief	
305	56930	Sheet Metal Phillips Screw 8 X 3/8	
310	16912	A.C. Gray Power Cord	
315	56501	4-40 Hex Nut	
320	16607	#4 Lockwasher I.T.	
325	506336	10-32 X 3/8 Pan Head Slotted Screw	2
330	505C190-2	Back Cover, Box	
335	56933	Relay Socket Assy.	3
340	56922	Relay	3
345	56714	3/8 X 1 5/16-18 Shoulder Bolt	
350	56929	Spring 9-1005-11	
355	505B210	Spring Detent	
360	505B020	Scissor Arm Act. Assy.	
365	505C209	Scissor Arm Assy	
370	505B114	1/2 X 1 1/4 X 1/2 Shoulder Screw	
375	56801	#4 Flatwasher	
380	16420	4-40 X 1/4 Screw PHP	
	56503	1/4-28 Nut	2
	16602	1/4 Lockwasher Internal Tooth	2
385	505B205	Rod, Scissor Actuator	
390	56743	1/4-28 X 7/8 Socket Head Screw	
395	56000	Rod End Bearing	2
400	505B129	Spacer Cutter Cam	
405	56717	4-40 X 1 1/2 Phillips Pan Head Screw	2
410	56801	#4 Flatwasher	2
415	117278	Insulator Switch	
420	117278	Insulator Switch	
425	16907	Micro Switch	
430	16907	Micro Switch	
435	56727	3/8-16 X 1 1/4 Hex Head Screw	
440	16614	3/8 Lockwsher	
445	505D173	Frame	
450	506337	#10 Split Lockwsher	2
455	56719	10-24 X 3/4 Hex Head Socket Cap Screw	2
460	56803	Cut Washer 1/4	4
465	16602	Lockwasher 1/4 Internal Tooth	4
470	16416	1/4-20 X 1 1/4 PHP Screw	
475	56738	1/4-20 X 1/2 Screw Hex Flat Socket	4

No.	Part No.	Description	Qty.
485	505B156	Spacer Chain Guard	2
490	505B155	Guard Ribbon Drive Chain	
495	56802	#10 Flatwasher	
500	56705	10-24 X 1 1/2 Socket Head Screw Hex	
505	56704	1/4-20 X 1/2 PHP Screw	2
	16602	Lockwasher 1/4 Internal Tooth	2
510	117555	Small Brake Assy Complete	
	117D918	Large Brake Assy	
515	505C166	Foot Right Hand	
516	56708	1/4-20 X 3/4 Hex Head Screw	4
	16602	Lockwasher 1/4 Internal Tooth	4
517	505C163	Foot	4
518	505C164	Brake Mount Plate	
519	505C165	Foot Left Hand	
520	16901	Rubber Foot with Steel Washer	
525	56710	10-24 X 5/8 Phillips Pan Head Screw	
530	56705	10-24 X 1 1/2 Socket Head Screw Hex	
535	56802	#10 Flatwasher	
540	505B171	Guard Chain Scissor Drive	
545	505B156	Spacer - Chain Guard	
550	56301	#35 Chain	
	56401	Connecting Link #35	
555	505B172	Sprocket Drive Main Motor	
560	16602	Lockwasher 1/4 Internal Tooth	
565	1160	1/4-20 X 2 Hex Head Screw	
570	505B112	1/4-20 X 1/4 X 1 1/2 Shoulder Bolt	
575	505B229	Sprocket Cam Drive	
580	14432	Thumbscrew Black Nylon	
585	56728	1/4-20 X 1/2 Screw Socket Head	
590	56803	1/4 Cut Washer	
	56810	1/4 Flat Washer	
595	56724	1/4-20 X 3/4 Screw Hex Flat Head	
600	505B177	Spring Trigger	
605	505B013	Trigger Assy.	
610	56715	1/4-20 X 1/2 Screw Hex Button	
701	56910	1/8 x 1 Roll Pin	
702	56602	O-Ring	
703	505B107	Ribbon Forming Arm Support	
704	56939	3/16 X 1 Dowel Pin	
615	16602	Lockwasher 1/4 Internal Tooth	
625	56955	.005 Shims	
630	56723	10-24 X 1/4 X 3/8 Shoulder Screw	
635	56723	10-24 X 1/4 X 3/8 Shoulder Screw	
640	56001	Bearing	
645	505C105	Cam Scissor Guide	
650	505C102	Right Scissor Arm	
	505B214	Fixed Chute	
655	505B010	Drag Link Assy	
660	56723	10-24 X 1/4 X 3/8 Shoulder Screw	
665	56001	Bearing	
670	505C101	Left Scissor Arm	
675	16608	Lockwasher Internal Tooth 8-32	
680	16402	8-32 X 3/8 PHP Screw	
685	505B216	2" Chute - Optional Sizes Available	
690	505B104	Scissor Cover Support	
695	505C103	Scissor Cover	
700	505B221	Ribbon Forming Lever Assembly	
705	56712	6-32 X 3/4 Socket Cap Screw	
710	56803	1/4 Cut Washer	
715	56803	1/4 Cut Washer	
720	56906	Magnet	
725	56719	10-24 X 3/4 Hex Head Socket Cap Screw	2
730	56719	10-24 X 3/4 Hex Head Socket Cap Screw	4
735	506337	#10 Split Lockwasher	
740	505B176	Bag Switch Cam	
	56741	8-32 X 1/4 Set Screw	
745	505B144	Slide Plate Retainer	
750	505B180	Lower Stop	
755	505B189	Twister Shaft	
760	505B018	Twister Support Assy.	
765	505B117	Driver Twister Sprocket	
770	56501	4-40 Hex Nut	
	16607	4-40 Lockwasher	
775	505B122	Guard Chain Twister Drive	
750	16907	Micro Switch	
785	220847-2	Spacer	
790	56302	#25 Chain	
	56400	Connecting Link #25	2
	56921	Double Offset Link	
795	56716	10-24 X 5/16 PHP Screw	3
800	16609	#10 Lockwasher	3
805	117278	Insulator Switch	
810	16407	4-40 X 7/8 PHP Screw	2
	56801	#4 Flatwasher	2
815	18030	4-40 X 1/2 PHP Screw	2
820	56801	#4 Flatwasher	2
825	56900	Metal Cable Clamp 1/4"	2
830	505B019	Support Assy. Twister Drive	
835	506337	#10 Split Lockwasher	2
840	56705	10-24 X 1 1/2 Screw Hex Socket Head	2
845	56955	.005 Shim	
850	16001	Bearing	
855	505B192	Twister Drive Sprocket	
860	56705	10-24 X 1 1/2 Screw Hex Socket Head	2
865	506337	#10 Split Lockwasher	2
870	505B019	Support Assy. Twister Drive	

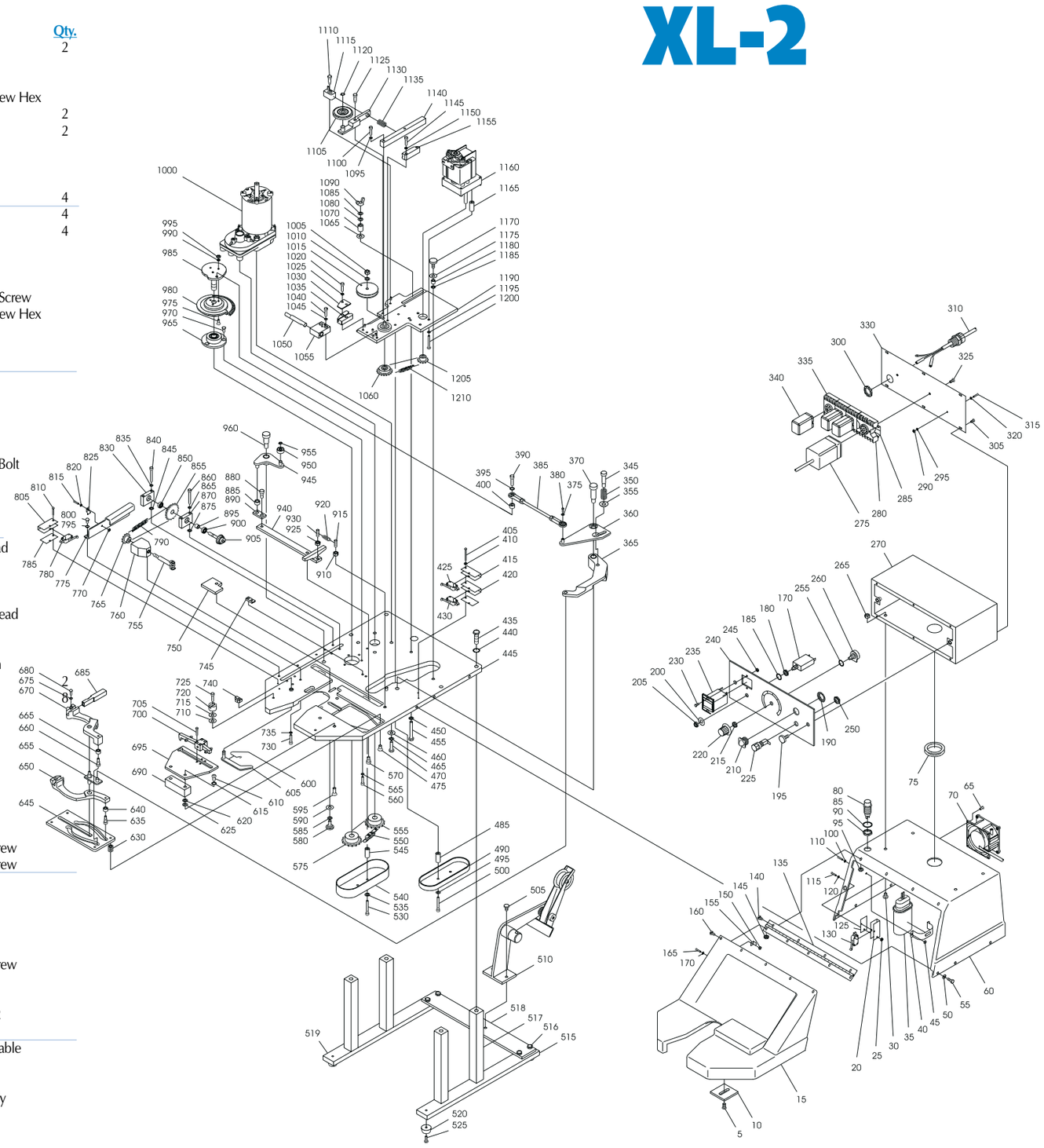

No.	Part No.	Description	Qty.
875	56955	.005 Shim	
880	56726	SHSS-7A Shoulder Screw	
885	505B129	Spacer Cutter Cam	
890	505B130	Link - Cutter Actuator	
895	505B117	Spacer	
900	16001	Bearing	
905	505B015	Pinion Shaft Assy	
910	16103	1/4-20 Hex Nut Cad Plated Stud	
915	505B131	1/4-20 X 3/4 Screw Spring Stud	
920	117494	Spring - Tension Ribbon Feed	
925	505B131	1/4-20 X 3/4 Screw Spring Stud	
930	16103	1/4-20 Hex Nut Cad Plated Stud	
940	505B133	Connector Cutter Act.	
945	505B011	Bell Crank Assy. Cutter Act.	
950	56002	Bearing Ball	
955	16304	Snap Ring	
960	56100	3/8-16 X 1/2 X 3/4 Shoulder Bolt	
965	505B126	Cutter Cam Support	
970	56729	10-24 X 1/2 Hex Flat Socket Screw	3
975	56729	10-24 X 1/2 Hex Flat Socket Screw	3
980	505C127	Gear Segment - Twister Drive	
985	505B012	Cutter Actuator Cam Assy.	
990	506337	#10 Split Lockwasher	
995	56506	10-24 Hex Nut	
1000	56926	WSM Main Motor	
1005	56503	1/4-28 Hex Nut	
1010	16602	1/4 Lockwasher	
1015	505B197	Ribbon Feed Drive Wheel	
1020	56719	10-24 X 3/4 Hex Head Socket Cap Screw	2
1025	506337	#10 Split Lockwasher	2
1030	505B168	Knife Anvil Cover	
1035	505B169	Knife Anvil	
1040	56719	10-24 X 3/4 Hex Head Socket Cap Screw	
1045	506337	#10 Split Lockwasher	
1050	505B153	Knife - Ribbon Cuttoff	

No.	Part No.	Description	Qty.
1055	505B154	Knife Guide	
1060	505B158	Sprocket - Ribbon Feed Wheel	
1065	56803	1/4 Cut Washer	
1075	506352	Nylon Spacer	
1080	56803	1/4 Cut Washer	
1085	16602	1/4 Lockwasher	
1090	1113	1/4-20 Wingnut	
1095	506337	#10 Split Lockwasher	
1100	506338	10-24 X 7/8 Socket Head Screw	
1105	505B198	Wheel Pressure Ribbon Drive	
1110	505B113	1/4 X 5/8 X 10-24 Shoulder Screw	
1115	505B170	Pressure Wheel Cam	
1120	56606	Retaining Ring	
1125	505B113	1/4 X 5/8 X 10-24 Shoulder Screw	
1130	505B014	Lever Assy. - Ribbon Wheel	
1135	56940	Spring	
1140	505B152	Ribbon Guide Flat	
1145	506338	10-24 X 7/8 Socket Head Screw	2
1150	506337	#10 Split Lockwasher	
1155	505B151	Grooved Ribbon Guide	
		1 for 1/4" Material	
		2 for 1/4 Double Wire Material	
		3 for 5/32" Material	
1160	505C027-1	Motor Assy ECM	
1165	505B152	Spacer Chain Guard	
1170	14432	Thumbscrew Black Nylon	
1175	14407	1/4-20 X 3/4 Screw Cap Socket Head	
1180	56810	1/4 Flatwasher	
1185	505B119	Spacer Ribbon Drive Plate	
1190	505D157	Ribbon Drive Slide Plate	
1195	506337	#10 Split Lockwasher	4
1200	16715	8-32 X 1 1/2 PHP Screw	4
1205	505B229	Sprocket Cam Drive	
1210	56302	#25 Chain	

PLAS-TIES
1500 E. CHESTNUT
SANTA ANA, CA 92701
800-854-0137, 714-542-4487
FAX 714-972-2978